Pioneer

XPRS Series

XPRS10
XPRS12
XPRS15
XPRS115S
XPRS215S

ACTIVE LOUDSPEAKER / ACTIVE SUBWOOFER

http://pioneerproaudio.com

For FAQs and other support information for this product, visit the above site.

Operating Instructions

Introduction

How to Read This Document

Thank you for purchasing a this product product. To ensure you can maximize the functions of this device and use them effectively, please read this Operating Instructions and Important Safety Precautions thoroughly for correct use.
Please be sure to read in particular the Important Safety Precautions, and keep the Operating Instructions and Important Safety Precautions together with the Warranty.
For more information on installation, please read the Installation Manual.
http://pioneerproaudio.com

Main Features

2 400-W high output and high sound quality are achieved by mounting a D-class amplifier module of the professional amplifier leading company Powersoft in a wooden cabinet featuring outstanding acoustic characteristics.
The XPRS can be used not only as a stationary sound system in a stationary facility but also as sound equipment for events as it can be easily transported and set up quickly.

■ High sound quality design of wooden cabinet structure featuring outstanding acoustic characteristics
A wooden cabinet is employed to provide superior sound quality in all models.
The cabinet made of highly rigid materials features outstanding acoustic characteristics and reproduces clear sound quality ranging from a minute sound to a powerful sound.

■ Equipped with a high-efficiency and high-power class-D amplifier module
The XPRS is equipped with a D-class amplifier module realized by the technology of Powersoft and achieves a 2 400-W (at peak) high output comparable with that of a large power amplifier.
A very high power efficiency can reduce the energy required to get the same output power.

■ Advanced protective functions preventing field problems
A variety of functions such as status monitoring and limiter functions reliably protect the driver, amplifier, and power supply by using advanced DSP control. Protective circuits designed to meet the reliability requirements for professional use prevent problems in the field.

■ A variety of I/O terminals enabling flexible system connections
A mixing function is available which mixes multiple input sources and outputs them. In addition, a through output terminal is available to make it easy to connect with full-range speakers and multiple subwoofers.

■ Four EQ modes enabling a quick system setup (full-range models)
Four EQ modes of FLAT, BASS+, SPEECH, and WEDGE are available which enable selection of the optimum acoustic characteristic to suit the application by just selecting a switch.

■ Multi-angle pole socket enabling installation of a pole at two angles (full-range models)
Two angles of 0 and 7 can be selected to suit the size of the venue when installing the speakers using a pole.

Confirm All Accessories

Power cords
Installation and Operation Manual (this document)
Important Safety Precautions

The contents of the warranty for the United States and Canada are provided on the last pages of the instructions in English and French.

Names and Functions of Parts

Front Panel Facilities

1 Tweeter

1-inch throat 1.75-inch diaphragm compression driver

2 Rotatable horn (XPRS12, XPRS15)

This is a constant directivity horn that can be rotated.

- Factory default directivity: 90 degrees horizontally and 60 degrees vertically
- Directivity when turned 90 degrees: 60 degrees horizontally and 90 degrees vertically

2 Horn (XPRS10)

This is a constant directivity horn with directivity of 90 degrees horizontally and 60 degrees vertically.
* Horn rotation is not possible for XPRS10.

3 Woofer

4 FRONT LED indicator

This is a white LED indicator. Lighting is in accordance with the FRONT LED setting on the rear panel.
For details on the settings, see the explanation of the rear panel.

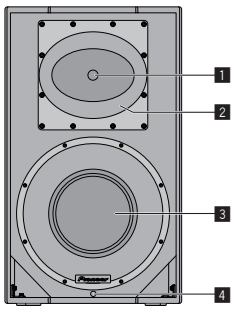

2way full-range model
XPRS10, XPRS12, XPRS15

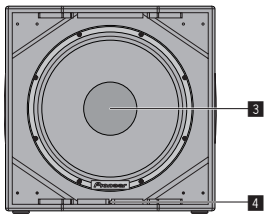

Subwoofer model
XPRS115S

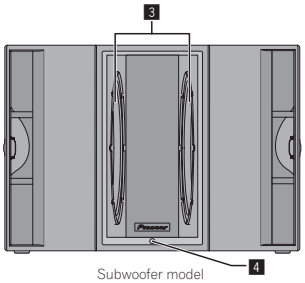

Subwoofer model
XPRS215S

Rear Panel Facilities (Full-Range Models)

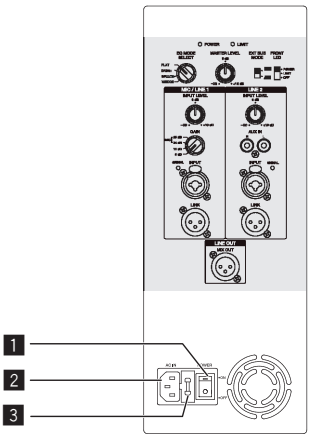

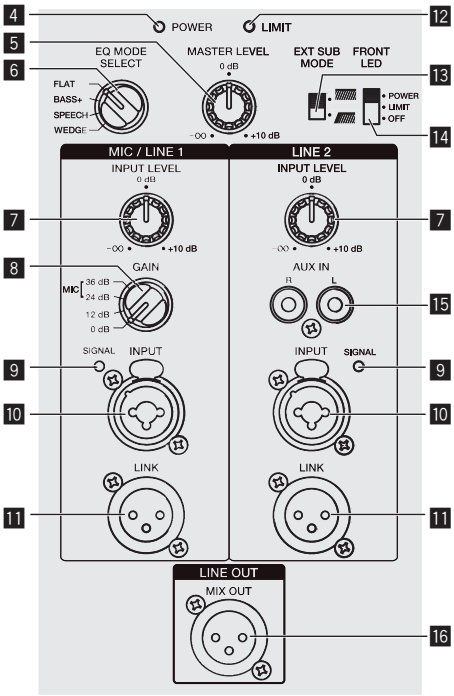

1 POWER switch
Turns this speaker's power on and off.

2 AC IN
Connect the power cord to AC IN and then to the power outlet.

3 Fuse holder

4 Power indicator
Lights in blue when the power is turned on.

5 MASTER LEVEL
Adjusts the output level.

6 EQ MODE SELECT
Switches to four EQ modes (FLAT, BASS+, SPEECH, and WEDGE). For details, see "EQ MODE Settings" on page 6.

7 INPUT LEVEL knob
Adjusts the input signal level.

8 GAIN knob (for MIC/LINE1 only)
Select the gain according to the output signal level of the device to be connected. The selected gain is added to the signal input to this unit.

- To input the signal of a line output device to this speaker, select [0 dB] or [12 dB].
- To input a low-level output signal such as that of a microphone to this unit, select [24 dB] or [36 dB].

9 SIGNAL indicator
A green indicator lights when an input signal is detected.

10 MIC/LINE1 and LINE2 INPUT
Both the XLR connector (balanced) and 1/4" TRS (balanced type PHONO) are supported. The XLR connector consists of 1 "ground," 2 "hot," and 3 "cold."

11 LINK
This is the XLR output connector (balanced). A signal input to XLR INPUT will be output directly. (A signal input to AUX IN of LINE2 will not be output.)

12 LIMIT indicator
Lights in red when the built-in limiter is activated or when the input level is too high and the sound is distorted. When that happens, lower the output level of the connected device or lower the input level or master level of this unit.

13 EXT SUB MODE
Select [ ]for normal use.
Select [ ] when using a subwoofer.

14 FRONT LED
Selects the display setting of the FRONT LED indicator (white).
[POWER] Lights when the power is turned on.
[LIMIT] Lights when the limiter is activated.
[OFF] The FRONT LED does not light.

15 AUX IN
These are the RCA input connectors (unbalanced).
A stereo signal input to AUX IN is mixed to a monaural signal (not output from the LINK connector).

16 MIX OUT
This is the XLR output connector (balanced). Mixes the signal input to MIC/LINE1 and Line2 and then outputs it.
A signal adjusted in MIC GAIN and INPUT LEVEL is output.

CAUTION
When the FRONT LED setting is set to [OFF] and [LIMIT], the speaker may appear the same as when the power plug is disconnected from the power outlet depending on the specification of the product, but the power is not shut off. If you wish to shut off the power to the woofer completely, you must disconnect the power plug from the power outlet. Install the speaker near a power outlet so the power plug can easily be accessed. Leaving the power plug inserted in a power outlet for a long period of time may cause fire.

Rear Panel Facilities (Subwoofer Model)

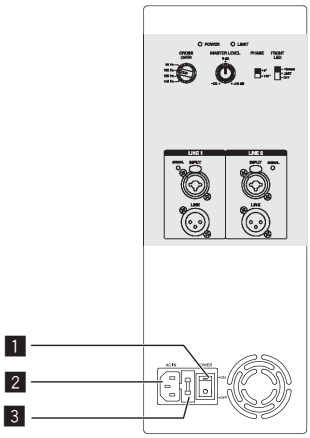

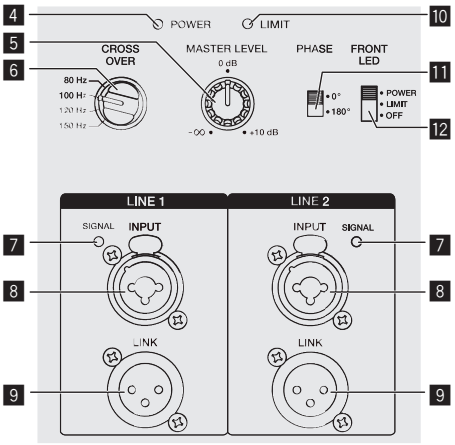

1 POWER switch
Turns this speaker's power on and off.

2 AC IN
Connect the power cord to AC IN and then to the power outlet.

3 Fuse holder

4 Power indicator
Lights in blue when the power is turned on.

5 MASTER LEVEL
Adjusts the output level.

6 CROSS OVER
Selects the cut-off frequency of the low pass filter for the subwoofer from 80 Hz, 100 Hz, 120 Hz, and 150 Hz.
100 Hz is recommended when using the subwoofer with the XPRS Series full-range speakers.

7 SIGNAL indicator
A green indicator lights when an input signal is detected.

8 LINE1 and LINE2 INPUT
Both the XLR connector (balanced) and 1/4" TRS (balanced type PHONO) are supported. The XLR connector consists of 1 "ground," 2 "hot," and 3 "cold."

9 LINK
This is the XLR output connector (balanced). A signal input to XLR INPUT will be output directly.

10 LIMIT indicator
Lights in red when the built-in limiter is activated or when the input level is too high and the sound is distorted. When that happens, lower the output level of the connected device or lower the input level or master level of this unit.

11 PHASE
Switches the polarity for the subwoofer. Select the one that improves the playback of low frequencies when using the subwoofer with other speakers.

12 FRONT LED
Selects the display setting of the FRONT LED indicator (white).
[POWER] Lights when the power is turned on.
[LIMIT] Lights when the limiter is activated.
[OFF] The FRONT LED does not light.

CAUTION
When the FRONT LED setting is set to [OFF] and [LIMIT], the speaker may appear the same as when the power plug is disconnected from the power outlet depending on the specification of the product, but the power is not shut off. If you wish to shut off the power to the woofer completely, you must disconnect the power plug from the power outlet. Install the speaker near a power outlet so the power plug can easily be accessed. Leaving the power plug inserted in a power outlet for a long period of time may cause fire.

Installation and Connections

How to Install

The playback sound of the speaker is subtly influenced by the conditions of the listening room. Carefully consider the installation location before installing the speaker so that it can be used in the best conditions. AlphaTheta Corporation will not be liable for any damages arising from the use of the speaker (including but not limited to loss of business opportunities), regardless of the installation method.
Use the handles on the top or the sides of the speaker when moving and installing the speaker.

CAUTION

- When standing or laying the XPRS115S, XPRS215S, take care that the casters do not slip and cause an injury.
- To promote proper cooling, please assure that sufficient space is preserved between the speakers and nearby walls or other components (minimum 30 cm or more above, behind, and to right and left sides of each speaker). Leaving insufficient space between the speaker and walls or other components may lead to rising interior temperatures, leading to malfunction or damage.

Installation Using a Speaker Pole

XPRS12/XPRS15

The full-range models of the XPRS series have a 35-mm-diameter multi-angle pole socket on the bottom surface and can be installed downward at an angle of 0° or 7° to the floor surface.
The subwoofer model of the XPRS series has an M20 screw-in pole socket on the top surface and the pole can be secured firmly.
The combinations shown in the following figures are recommended for the XPRS series. Use with a combination other than those may result in the speakers toppling over, causing damage or injury. To use a speaker pole, check the cautions on the right and perform the installation safely.

CAUTION

- At least two persons should together lift the speaker to install. Give sufficient consideration to safety when performing the work.
- For the speaker pole, use a 35-mm-diameter, one-side M20 screw-in speaker pole. Use a commercially-available product with a length of 900 mm or less. AlphaTheta Corporation will not be liable for any damages (including but not limited to loss of business opportunities) arising from the use of a speaker pole other than specified.
- Install the subwoofer in a stable location and secure the speaker pole firmly.
- Ensure that there is no danger of toppling.
- Cables should be taped or tied together with cable ties so as to avoid the danger of tripping on the cables and toppling the speaker.

Multi-angle pole socket

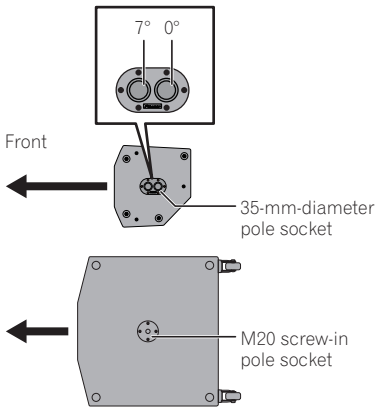

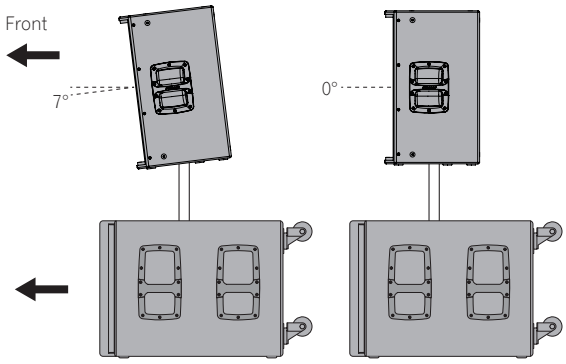

Installation using a speaker pole

XPRS12, XPRS15

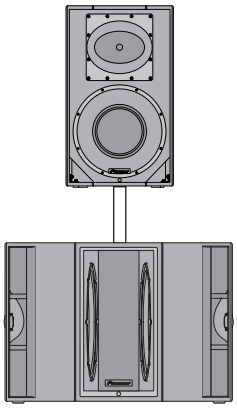

XPRS215S

Installation Using the Rigging Points on the Speaker

- The full-range models have suspension-mounting rigging points on them. The speaker can be suspended using commercially-available eye bolts. The rigging point has an M10 screw hole (for an eye bolt with a thread length of 30 mm to 50 mm).
- When installing the speaker suspended, ask a qualified technician to perform the work.
- Remove the screws from the rigging points on the speaker and attach eye bolts. Do not use the speaker while the screws are removed. The sound will be adversely affected by air leakage.
- Be sure to use at least three rigging points to suspend the speaker. Furthermore, be sure to also implement an extra safety measure such as using a wire.
- Use brackets, wires, and a wall or ceiling strong enough to bear the weight of the speaker. Ask for commercially-available brackets at the shop where you purchased the speaker.
- Be sure to confirm the safety after installing the speaker and periodically thereafter.

★:Rigging points

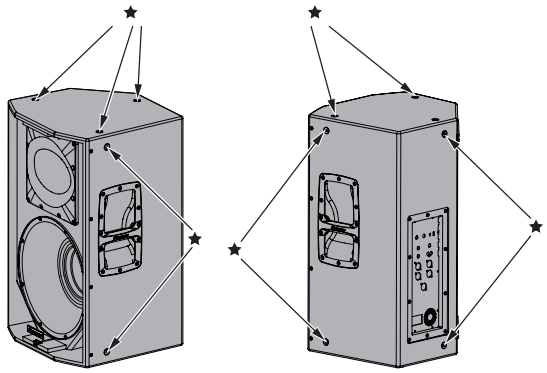

Casters of the subwoofer model

- The subwoofer model comes with casters that allow you to easily move it around.
- To use it as a fixed installation, you can remove the casters.
- When using it with the casters removed, be sure to put back the caster fixing screws.
  If you use it with the screws removed, the sound quality will be affected by air leakage.

★:Caster

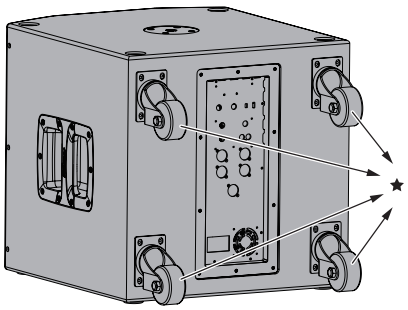

▲:M5 hex screw (thread length 25 mm)

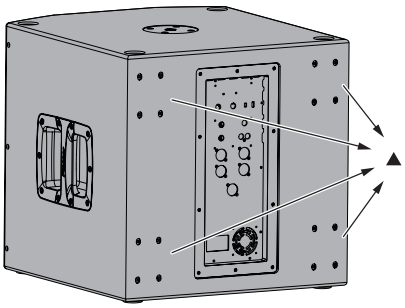

EQ MODE Settings

Four EQ modes (FLAT, BASS+, SPEECH, and WEDGE) are available for the full-range models. EQ MODE can be selected from four options using the [EQ MODE SELECT] switch. Select the best mode according to your preferences and the usage situation.

FLAT

Reproduces the input sound faithfully. (Factory default setting)

BASS+

This setting increases the presence of low frequencies and reproduces powerful dance music at a club, etc.

SPEECH

This setting emphasizes the voice frequencies to make it easy to listen to the voice of a lecturer, etc.

WEDGE

This setting suppresses the excessive boost in the low frequencies that occurs when the speaker is installed on the floor surface as a floor monitor.

Connections

When making or changing connections, always turn off the power and disconnect the power cord from its outlet.
Also, be sure to read the operating instructions for the other components to which you are connecting these speakers.
Do not connect the power cord until all other connections are completed.
Use only the furnished accessory power cord.

Setup example

General Stereo System

Amplifier connection

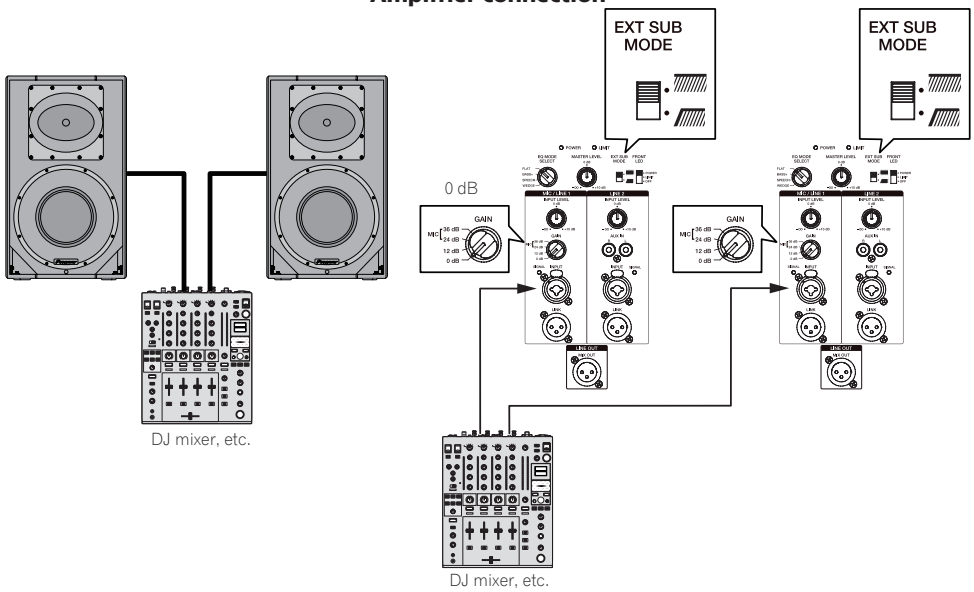

System with Only a Microphone Connected

It is recommended to set EQ MODE SELECT to SPEECH.

Amplifier connection

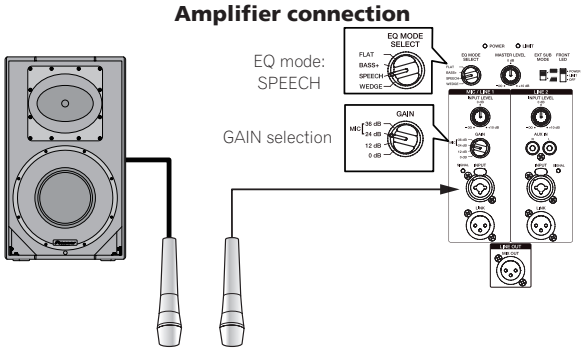

Note:

To prevent feedback howling

- Use the microphone with it's directionality out of line with the speaker's output direction. For example, use the microphone from behind the speaker, or change the direction of the microphone.
- Use the microphone with the GAIN setting and INPUT LEVEL knob set to appropriate positions.

System for Stage Monitor

Setting EQ MODE SELECT to WEDGE is recommended.

Amplifier connection

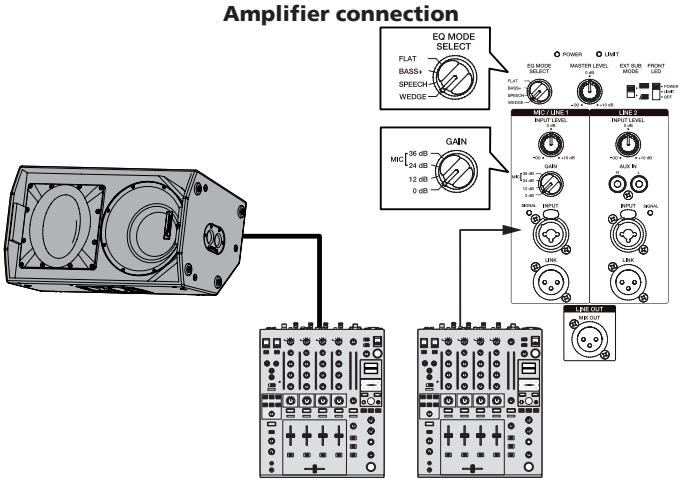

System with Subwoofer Connected

Amplifier connection

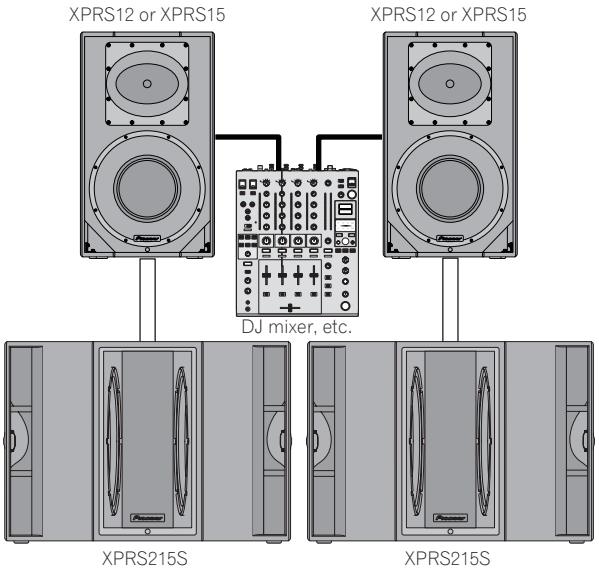

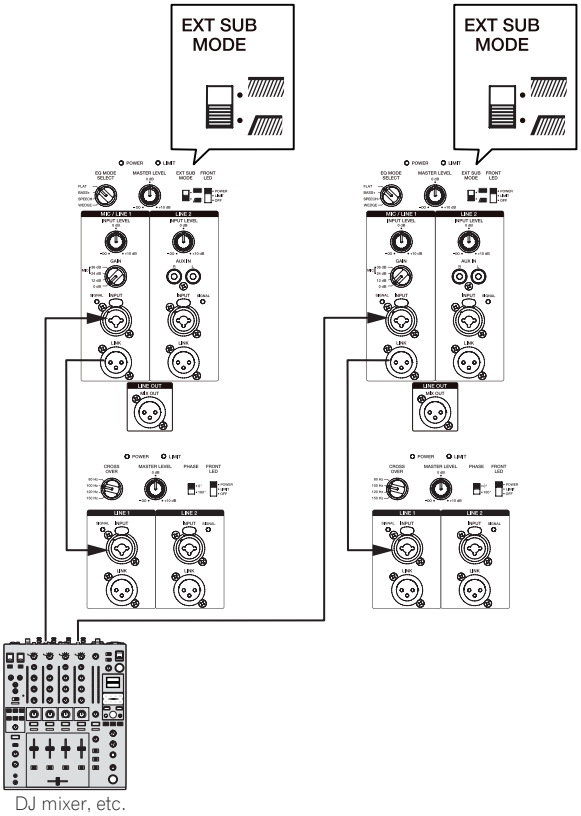

When using the speaker with the XPRS series, it is recommended to set EXT SUB MODE of a full-range model to [• ▨] and set CROSS OVER of the subwoofer model to 100 Hz.

System with XPRS215S Mono Mix Connected

Amplifier connection

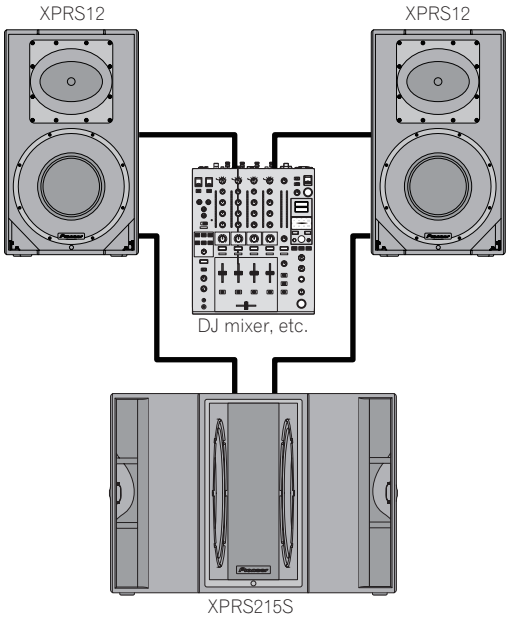

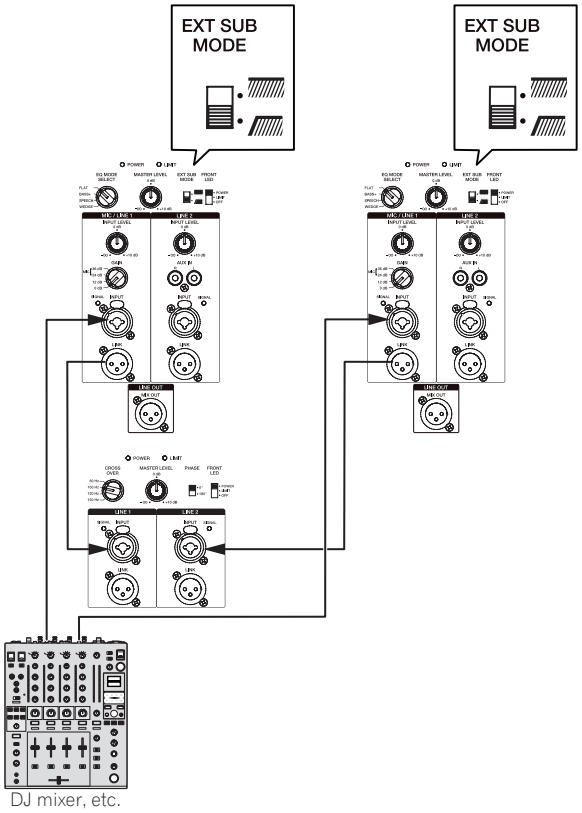

Additional Information

Troubleshooting

- If you think you are experiencing a malfunction with this unit, check the following items. Also check other devices connected to the unit. If the problem persists, consult your dealer for service.
- On occasion, the unit may fail to operate properly due to static electricity or other external conditions. In this event, disconnect the power cord and wait for five seconds or more, then reconnect the power cord and check for proper operation.

Symptom	Items to Check	Remedy
No power	Is power cord connected properly?	Connect power cord to outlet (page 6).
No sound from connected audio devices, or sound is very small.	Has connected audio device been set properly?	Set device's ouput selector and sound volume properly.
	Is connection cable connected properly?	Connect cables properly (page 7).
	Are connectors or plugs dirty?	Clean connectors and plugs before connecting.
	Is sound level set properly?	Turn the MASTER LEVEL knob on the rear panel of the speaker slowly to the right to increase the volume.
	Is the power turned ON?	Turn on the POWER switch on the rear panel of the speaker.
Sound is distorted, or the LIMIT indicator is lit.	Is the GAIN selector set appropriately?	Check that the GAIN setting on the rear panel is appropriate (page 3).
	Is the volume set to the correct position?	Turn the MASTER LEVEL or INPUT LEVEL control on the rear panel counterclockwise to reduce the volume until the LIMIT indicator turns off.
	Is the output signal level of the connected equipment set appropriately?	Adjust the output level of the connected equipment.
	Is the output signal of the connected equipment distorted?	Check the instruction manual of the connected equipment.
Howling (feedback effect)	Microphone is pointed toward speaker.	Change the orientation of the microphone.
	Are the microphone and speaker too close?	Move the microphone away from the speaker.
	Is the volume set to the correct position?	Turn the MASTER LEVEL or INPUT LEVEL control counterclockwise to reduce the volume.

Specifications

	XPRS10	XPRS12	XPRS15
Type	Bi-Amplifier 2-Way Active Full Range Speaker		
System characteristic			
Frequency Response (–10 dB)	55 Hz to 20 kHz	50 Hz to 20 kHz	40 Hz to 20 kHz
Directional characteristic (H x V)	90° x 60°	90° x 60° (90 degree rotatable)	
Maximum Sound Pressure Level (peak@1 m)*	134 dB	135 dB	136 dB
Crossover Frequency	2.0 kHz	2.0 kHz	2.0 kHz
Amplifier			
Amplifier type	Class D		
Amplifier output	1 200 W (LF800 W/HF400 W) peak 2 400 W		
Input connectors	XLR/TRS Combo x 2 (balanced) RCA x 2 (unbalanced)		
Impedance	10 kΩ		
Output connectors	Through output XLR x 2 (balanced) Mixed output XLR x 1 (balanced)		
Indicator	(Front Panel Facilities) FRONT LED (Rear Panel Facilities) POWER LIMIT SIGNAL x 2		
Speaker			
Woofer (LF)	10-inch cone	12-inch cone	15-inch cone
Tweeter (HF)	1-inch throat 1.75-inch diaphragm compression driver		
Enclosure	15 mm birch plywood bass reflex type		
Handle	1 (top)	2 (on both sides)	
Pole socket	35 mm socket (0°/7° multi-angle)		
Rigging point	M10 x 12		
Power unit/other			
Supported voltages	100 V (50 Hz/60 Hz) / 110 V to 240 V (50 Hz/60 Hz)		
Power consumption	162 W	167 W	175 W
External dimensions W x H x D	320 mm x 520 mm x 374 mm	380 mm x 647 mm x 398 mm	445 mm x 750 mm x 416 mm
Weight	18.9 kg	23.1 kg	29.2 kg

	XPRS115S	XPRS215S
Type	Active Subwoofer	
System characteristic		
Frequency Response (–10 dB)	40 Hz to 160 Hz	40 Hz to 160 Hz
Maximum Sound Pressure Level (peak@1 m)*	133 dB (half space)	135 dB (half space)
Amplifier		
Amplifier type	Class D	
Amplifier output	1 200 W peak 2 400 W	1 200 W (600 W x 2) peak 2 400 W
Input connectors	XLR/TRS Combo x 2 (balanced)	
Impedance	10 kΩ	
Output connectors	Through output XLR x 2 (balanced)	
Indicator	(Front Panel Facilities) FRONT LED (Rear Panel Facilities) POWER LIMIT SIGNAL x 2	
Speaker		
Woofer (LF)	15-inch cone	15-inch cone×2
Enclosure	15 mm birch plywood bass reflex type	15 mm birch plywood quasi band pass type
Handle	2 (on both sides)	4 (on both sides)
Pole socket	M20 screw socket	
Power unit/other		
Supported voltages	100 V (50 Hz/60 Hz) / 110 V to 240 V (50 Hz/60 Hz)	
Power consumption	240 W	240 W
External dimensions W x H x D	480 mm x 476 mm x 633 mm	743 mm x 524 mm x 811 mm
Weight	30.6 kg	55.9 kg

* Calculated value
Specifications and design are subject to possible modification without notice, due to improvements.

Dimensions

XPRS10

Upper cross-section

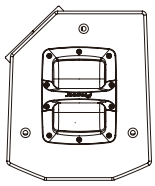

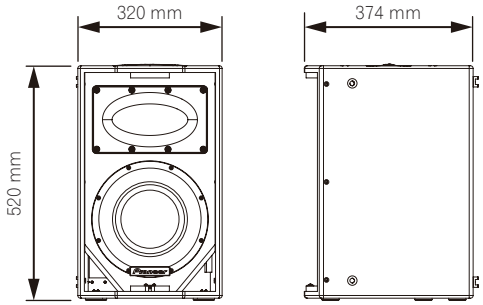

Lower cross-section

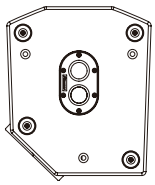

XPRS12

Upper cross-section

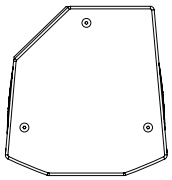

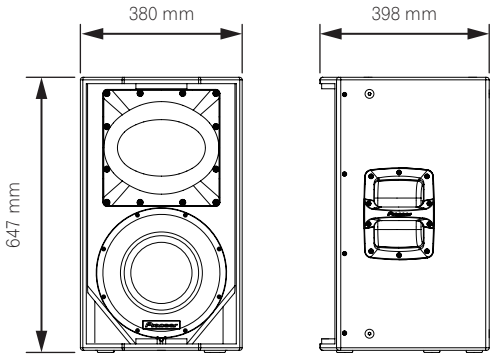

Lower cross-section

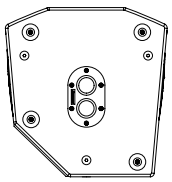

XPRS15

Upper cross-section

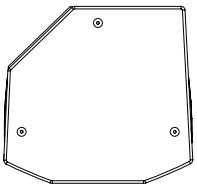

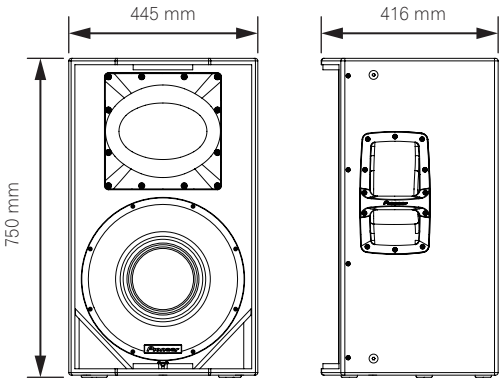

Lower cross-section

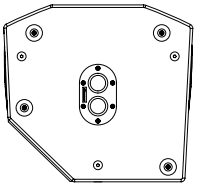

XPRS115S

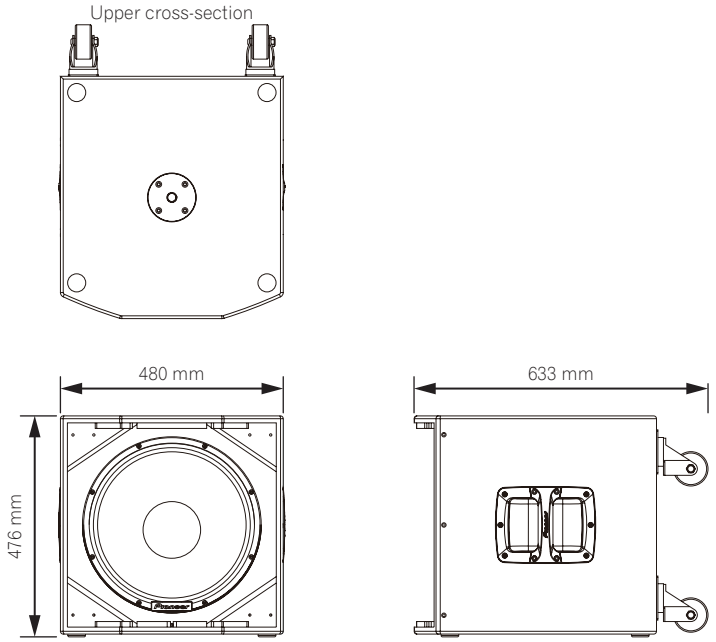

XPRS215S

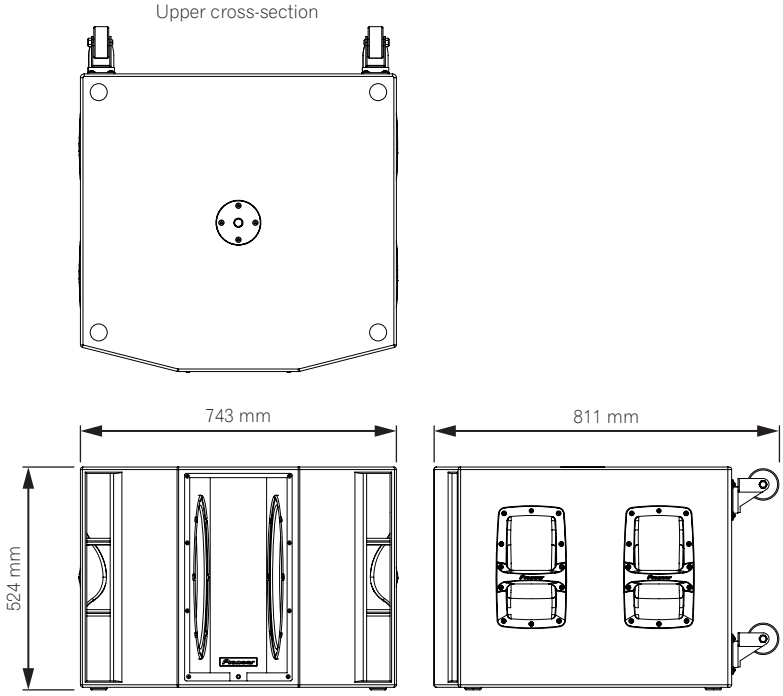

AlphaTheta Music Americas, Inc.

LIMITED WARRANTY

WARRANTY VALID ONLY IN THE U.S.A. AND CANADA

THREE YEARS LIMITED WARRANTY

AlphaTheta Music Americas, Inc. (COMPANY) warrants that Pioneer DJ/Pioneer branded products distributed by COMPANY in the U.S.A. and Canada that fail to function properly under normal use and conditions due to a manufacturing defect when installed and operated according to the owner's manual enclosed with the unit, and any officially published guidelines such as technical specifications or service communications, will be repaired or replaced with a unit of comparable value, at the option of COMPANY, without charge to you for parts or actual repair work. Parts supplied under this warranty may be new or rebuilt at the option of COMPANY.

THIS WARRANTY IS VALID ONLY IN THE COUNTRY OF PURCHASE. THIS LIMITED WARRANTY APPLIES TO THE ORIGINAL OR ANY SUBSEQUENT OWNER OF THIS PIONEER DJ PRODUCT DURING THE WARRANTY PERIOD PROVIDEDTHE PRODUCT WAS PURCHASED FROM AN AUTHORIZED COMPANY DISTRIBUTOR/DEALER IN THE U.S.A. OR CANADA. YOU WILL BE REQUIRED TO PROVIDE A SALES RECEIPT OR OTHER VALID PROOF OF PURCHASE SHOWINGTHE DATE OF ORIGINAL PURCHASE OR, IF RENTED, YOUR RENTAL CONTRACT SHOWINGTHE PLACE AND DATE OF FIRST RENTAL. IN THE EVENT SERVICE IS REQUIRED, THE PRODUCT MUST BE DELIVERED WITHIN THE WARRANTY PERIOD, TRANSPORTATION PREPAID, ONLY FROMWITHINTHE U.S.A. OR CANADA, AS APPLICABLE. AS EXPLAINED INTHIS DOCUMENT. YOUWILL BE RESPONSIBLE FOR REMOVAL AND INSTALLATION OFTHE PRODUCT. COMPANY WILL PAY TO RETURNTHE REPAIRED OR REPLACEMENT PRODUCTTOYOUWITHINTHE U.S.A. OR CANADA, AS APPLICABLE.

PRODUCT WARRANTY PERIOD

	Parts	Labor
Audio and Video	**3 Years**	**3 Years**

The warranty period for retail customers who rent the product commences upon the date product is first put into use (a) during the rental period or (b) retail sale, whichever occurs first.

WHAT IS NOT COVERED

IF THIS PRODUCT WAS PURCHASED FROM AN UNAUTHORIZED DISTRIBUTOR, THERE ARE NO WARRANTIES, EXPRESS OR IMPLIED, INCLUDING THE IMPLIED WARRANTY OF MERCHANTABILITY AND THE IMPLIED WARRANTY OF FITNESS FOR A PARTICULAR PURPOSE AND THIS PRODUCT IS SOLD STRICTLY "AS IS" AND "WITH ALL FAULTS".

COMPANY SHALL NOT BE LIABLE FOR ANY CONSEQUENTIAL AND/OR INCIDENTAL DAMAGES, INCLUDING WITHOUT LIMITATION LOSS OF USE, LOSS OF PROFITS OR LOSS OF WAGES, TO THE GREATEST EXTENT ALLOWED BY APPLICABLE LAW.

THIS WARRANTY DOES NOT APPLY IF THE PRODUCT HAS BEEN SUBJECTED TO POWER IN EXCESS OF ITS PUBLISHED POWER RATING.

THIS WARRANTY DOES NOT COVER THE CABINET OR ANY APPEARANCE ITEM, USER ATTACHED ANTENNA, ANY DAMAGE TO RECORDS OR RECORDING TAPES OR DISCS, ANY DAMAGE TO THE PRODUCT RESULTING FROM ALTERATIONS, MODIFICATIONS NOT AUTHORIZED IN WRITING BY COMPANY, ACCIDENT, MISUSE OR ABUSE, DAMAGE DUE TO LIGHTNING OR TO POWER SURGES, SUBSEQUENT DAMAGE FROM LEAKING, DAMAGE FROM INOPERATIVE BATTERIES, OR THE USE OF BATTERIES NOT CONFORMING TO THOSE SPECIFIED INTHE OWNER'S MANUAL.

THIS WARRANTY DOES NOT COVER THE COST OF PARTS OR LABOR WHICH WOULD BE OTHERWISE PROVIDED WITHOUT CHARGE UNDER THIS WARRANTY OBTAINED FROM ANY SOURCE OTHER THAN A COMPANY AUTHORIZED SERVICE COMPANY OR OTHER DESIGNATED LOCATION. THIS WARRANTY DOES NOT COVER DEFECTS OR DAMAGE CAUSED BYTHE USE OF UNAUTHORIZED PARTS OR LABOR OR FROM IMPROPER MAINTENANCE.

ALTERED, DEFACED, OR REMOVED SERIAL NUMBERS VOID THIS ENTIRE WARRANTY

THIS WARRANTY DOES NOT COVER DAMAGE CAUSED BY TAMPERING, ABUSE, OR NEGLECT OF THE PRODUCT, OR BY PARTS NOT PROVIDED BY COMPANY.

COMPANY AND ITS SERVICE AND REPAIR FACILITIES ARE NOT RESPONSIBLE FOR DAMAGE OR LOSS OF ELECTRONIC INFORMATION OR DATA STORED ON ANY RETURNED PRODUCT.

NO OTHER WARRANTIES

COMPANY LIMITS ITS OBLIGATIONS UNDER ANY IMPLIED WARRANTIES INCLUDING, BUT NOT LIMITED TO, THE IMPLIED WARRANTIES OF MERCHANTABILITY AND FITNESS FOR A PARTICULAR PURPOSE, TO A PERIOD NOT TO EXCEED THE WARRANTY PERIOD. NO WARRANTIES SHALL APPLY AFTER THE WARRANTY PERIOD. SOME STATES DO NOT ALLOW LIMITATIONS ON HOW LONG AN IMPLIED WARRANTY LASTS AND SOME STATES DO NOT ALLOW THE EXCLUSIONS OR LIMITATIONS OF INCIDENTAL OR CONSEQUENTIAL DAMAGES, SO THE ABOVE LIMITATIONS OR EXCLUSIONS MAY NOT APPLY TOYOU. THIS WARRANTY GIVES YOU SPECIFIC LEGAL RIGHTS AND YOU MAY HAVE OTHER RIGHTS WHICH MAY VARY FROM STATE TO STATE.

NO DEALER, DISTRIBUTOR, OR EMPLOYEE OF COMPANY IS AUTHORIZED TO MAKE ANY MODIFICATION, EXTENSION, OR MODIFICATION OF THIS WARRANTY.

If any term of this warranty is held to be illegal or unenforceable, the legality or enforceability of the remaining terms shall not be affected or impaired.

TO OBTAIN SERVICE

COMPANY has appointed a number of Authorized Service Companies throughout the U.S.A. and Canada should your product require service. To receive warranty service you need to present your sales receipt or, if rented, your rental contract showing place and date of original owner's transaction. If shipping the unit you will need to package it carefully and send it, transportation prepaid by a traceable, insured method, to an Authorized Service Company. Package the product using adequate padding material to prevent damage in transit. The original container is ideal for this purpose. Include your name, address and telephone number where you can be reached during business hours.

On all complaints and concerns in the U.S.A. and Canada call Customer Support at 1-844-784-0000.

For hook-up and operation of your unit or to locate an
Authorized Service Company, please call or visit:

AlphaTheta Music Americas, Inc.
1-844-784-0000
pioneerdj.com

DISPUTE RESOLUTION

Following our response to any initial request to Customer Support, should a dispute arise between you and COMPANY, COMPANY makes available its Complaint Resolution Program to resolve the dispute. The Complaint Resolution Program is available to you without charge. You are required to use the Complaint Resolution Program before you exercise any rights under, or seek any remedies, created by Title I of the Magnuson-Moss Warranty-Federal Trade Commission Improvement Act, 15 U.S.C. 2301 *et seq*.

To use the Complaint Resolution Program call 1-844-784-0000 and explain to the customer service representative the problem you are experiencing, steps you have taken to have the product repaired during the warranty period and the name of the authorized Distributor/Dealer from whom the Pioneer DJ/Pioneer branded product was purchased. After the complaint has been explained to the representative, a resolution number will be issued. Within 40 days of receiving your complaint, COMPANY will investigate the dispute and will either: (1) respond to your complaint in writing informing you what action COMPANY will take, and in what time period, to resolve the dispute; or (2) respond to your complaint in writing informing you why it will not take any action.

RECORD THE PLACE AND DATE OF PURCHASE FOR FUTURE REFERENCE

Model No. _____ Serial No. _____ Purchase Date _____

Purchased From _____

KEEP THIS INFORMATION AND YOUR SALES RECEIPT IN A SAFE PLACE

UCP1219-B3

© 2020 AlphaTheta Corporation. All rights reserved.

AlphaTheta Corporation
6F, Yokohama i-Mark Place, 4-4-5 Minatomirai, Nishi-ku, Yokohama, Kanagawa 220-0012 JAPAN

AlphaTheta株式会社
〒220-0012 神奈川県横浜市西区みなとみらい4丁目4番5号 横浜アイマークプレイス6階

Корпорация АльфаТета
6F, Йокогама i-Mark Place, 4-4-5 Минатомирай, Ниси-ку, Йокогама, Канагава 220-0012 ЯПОНИЯ

AlphaTheta EMEA Limited
Artemis Building, Odyssey Business Park, West End Road, South Ruislip, Middlesex, HA4 6QE, U.K. TEL: +44-203-7617-220

AlphaTheta Music Americas, Inc.
2050 W. 190th Street, Suite 109, Torrance, CA 90504, U.S.A. TEL: +1 (424) 488-0480

AT_001_all_01

<DRB1748-G>